QC-1

QC-1 is automatic end-effector exchange device for light load robot for various applications like a assembling of precise electric device, precise machine and handling purpose in medical product, food product.

QC-1 is compatible for use on FANUC's "Genkotsu Robot"

The flange interface on FANUC's Genkotsu Robot 1M-1iA is PCD20(4-axis and 6-axis spacs), so QC-1can be used on new or existing applications.

Lock without touching

The Master plate can lock onto the Tool plate with a gap between them.

Superior fail-safe locking mechanism

BL's unique lock/unlock mechanism contains a mechanical fail-safe feature which does not allow the Master and Tool plates to uncouple if the air pressure is shut off.

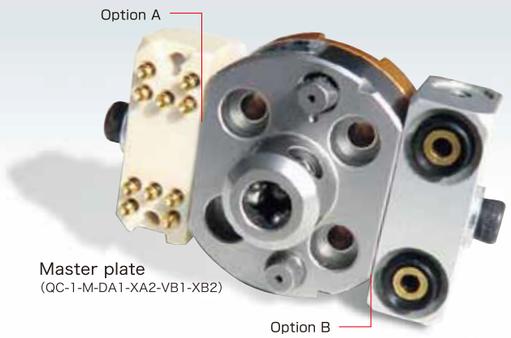

Master plate Attachments
- 4 bolts(M3×15)
- 1 locating pin (MSY3-8)

Specifications

Main Body

Load capacity		9.8N(1kg)
Positional repeatability		±0.015mm
Allowable dynamic moment	Bending direction (Tx, Ty)	4N·m(40.8kgf·cm)
	Twisting direction (Tz)	16.6N·m(169.4kgf·cm)
Coupling force (with air pressure of 0.49MPa) ※1		185N
Materials	Frame	Aluminum alloy
	Lock/ unlock mechanism	Stainless steel
Overall dimension (when coupled)		ϕ32xH29mm
Weight (Main body)	Master plate	60g
	Tool plate	30g
Self-separating mechanism		Ball-locking mechanism
Required air pressure		0.39~0.68MPa(4~7kgf/cm²)
Allowable temperature and humidity ranges		0~50℃、35~90%(Non-condensing)

Options

D	Electric signal contact block	3A×10(solder terminal)
P	Positive pneumatic ports	M3×2
V	Negative pneumatic ports	M3×2

●Installation position on options

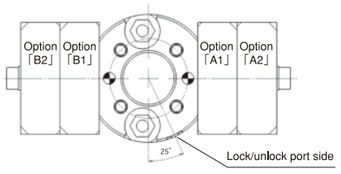

QC-1 Ordering Information

Master plate **QC-1 -M- ☐ A1 - ☐ A2 - ☐ B1 - ☐ B2** (Option)

Tool plate **QC-1 -T- ☐ A1 - ☐ A2 - ☐ B1 - ☐ B2** (Option)

X	No option
D	Electrical signals3A×10(solder terminal)
P	Positive pneumatic ports ※2
V	Negative pneumatic ports

(Note) Four options may be installed on the QC-1 (the A2 and B2 options available only if the A1 and B1 options are used).

Main Body Dimensions

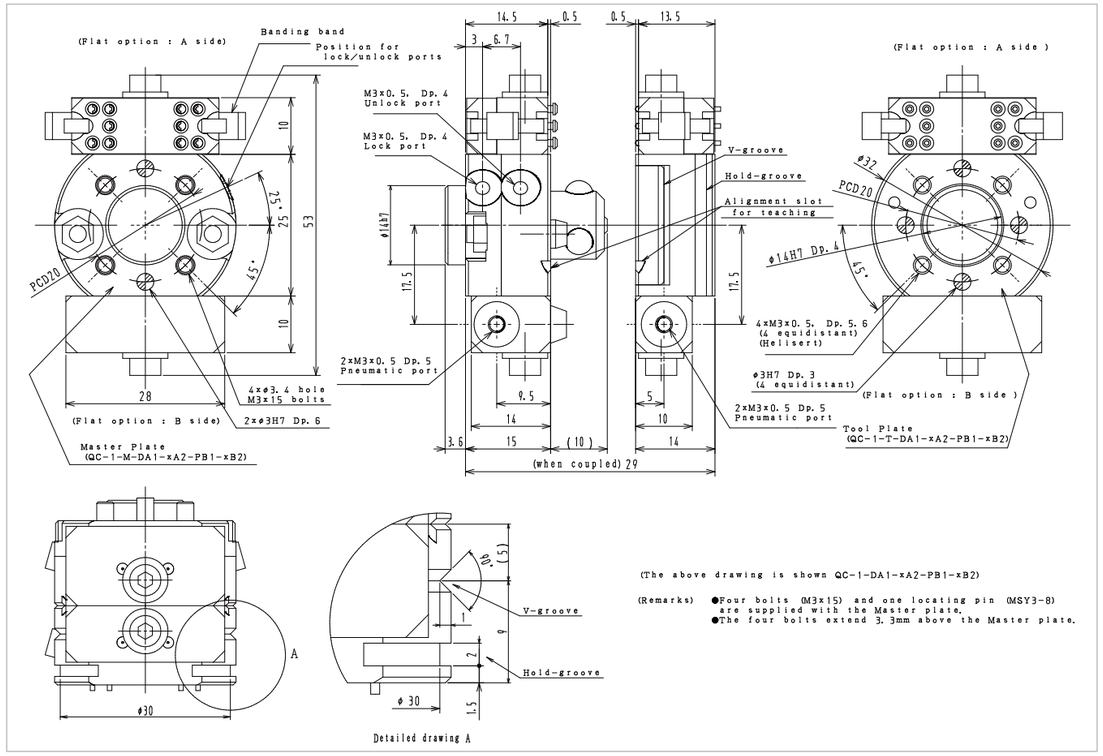

Options

■Electrical signal contact bloc

D

3A×10 (solder terminal)

■Pneumatic pressure ports contact bloc

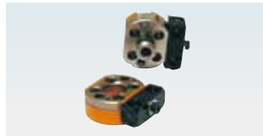

P

For positive pressure M3×2

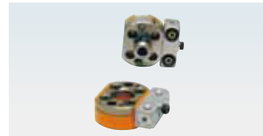

V

For negative pressure M3×2

Please contact BL Autotec, Ltd. for detailed information on the options.

※1 Coupling force is the force to achieve specified repeatability. Coupling will be maintained until unlock pressure is applied or device is damaged. ※2 If you request to add 2 pneumatic port block"P", please contact and discuss with BL Autotec before placing order.